REVISION RECORD				
REV	ECO	DESCRIPTION	DRFT	CHKD

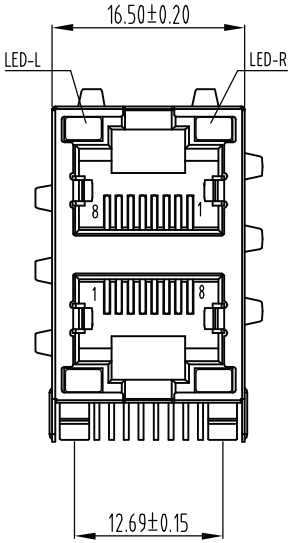

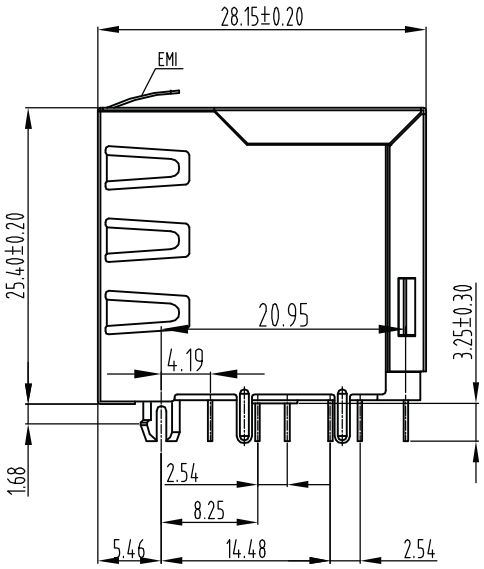

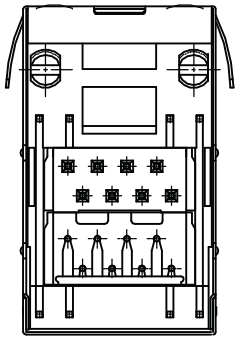

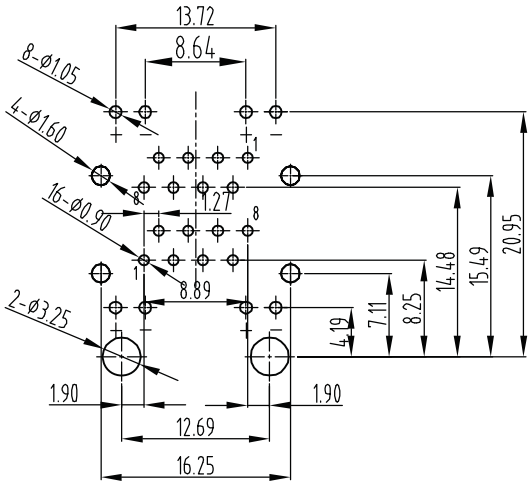

PCB LAYOUT/TOP VIEW

NOTES:

MATERIAL:

1.HOUSING	:GLASS FILLED POLYESTER UL94V-0
2.CONTACT (ROUND PIN Φ0.46mm)	:PHOSPHOR BRONZE WITH GOLD PLATING OVER NICKEL.
3.SHIELD	:0.20mm THICKNESS COPPER ALLOY WITH NICKEL PLATED.
4.LED	:OPTION

ELECTRICAL:

1.VOLTAGE RATING	:125V AC.
2.CURRENT RATING	:1.5AMP.
3.CONTACT RESISTANCE	:30 MILLIOHMS MAX.
4.INSULATION RESISTANCE	:500 MEGOHMS MIN @ 500V DC.
5.DIELECTRIC WITHSTANDING VOLTAGE	:1000V AC RMS 50Hz OR 60Hz. 1MIN.

MECHANICAL:

1.INSETION FORCE	:2.2Kg MAX.
2.RETENTION STRENGTH	:7.7Kg BETWEEN JACK AND PLUG
3.DURABILITY	:750 CYCLES MINI.

ENVIRONMENTAL:

1.STORAGE	: -40℃~+85℃.
2.OPERATION	: -40℃ TO 85℃.

THE MARTS MODULAR PLUG CONFORMAING TO FCC PART68

PART NUMBER:

DETACHED LISTS	MM (INCH)	DFTD JIANX	DATE 2011-06-02
	TOLERANCES EXCEPT AS NOTED	CHKD	DATE
		MFD	DATE
	MM .0 ± 0.20 ± .00 ± 0.15 ± .000 ± 0.10 ±	APPVL	DATE
		MATERIAL :	
	ANGLES ± 0.5°	QT'Y :	
	THIRD ANGLE PROJECTION	FINISH :	
		SCALE :	

东莞市涪程电子科技有限公司

TITLE

5J SERIES 2XN LED JACK

DRAWING NO. FCRJ45-JC88120 /PART NO.	SIZE A4	REV A/0
DO NOT SCALE DRAWING	SHEET X OF Y	